Exploded View of Fulcrum

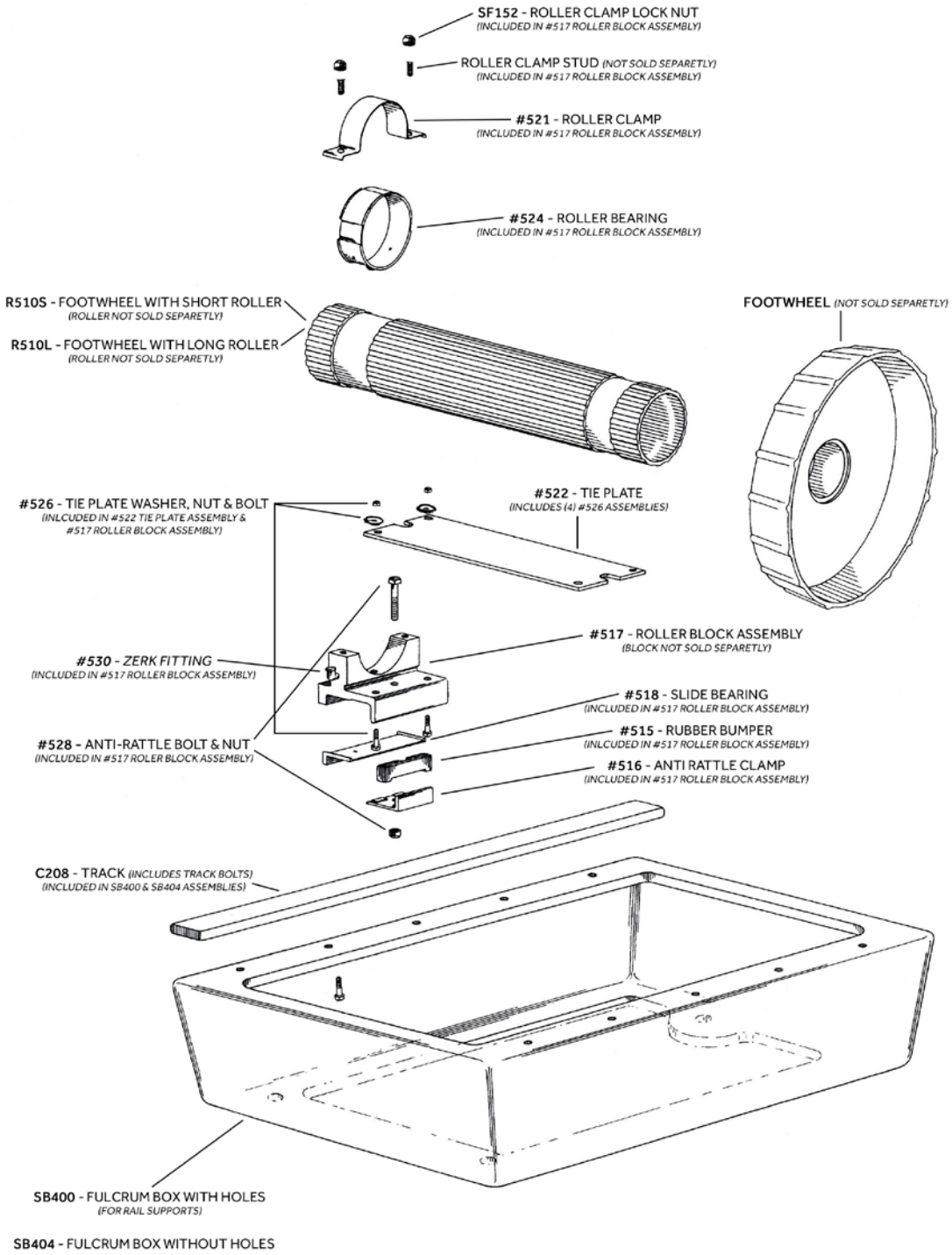

Duraflex International 160 Wunotoo Rd. Sparks, Nevada 89434 USA
Tel. 775-343-0115 Fax 775-343-0203 duraflexinternational.com